Rating	3A 12VDC,1.5A 24VDC cULus	Mount Hole	Circuit Structure
Contact R	50m ohm Max.	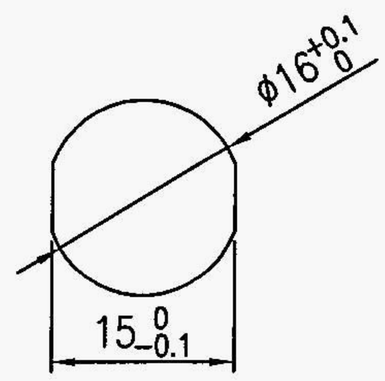	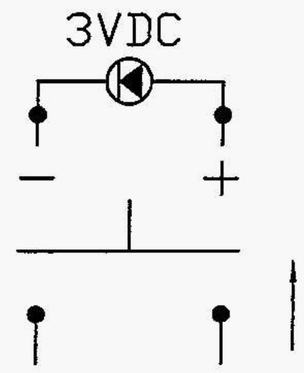
Insulation R	DC 500V 100M ohm Min.		
Dielectric Strength	AC 1500V 1 minute		
Operation Temperature	−20°C~85°C		
Circuit	4P SPST OFF−(ON) (LED)		

LED Rating
Red:@20mA,If=2.0VDC
Amber:@20mA,If=2.1VDC
Green@20mA,If=2.2VDC

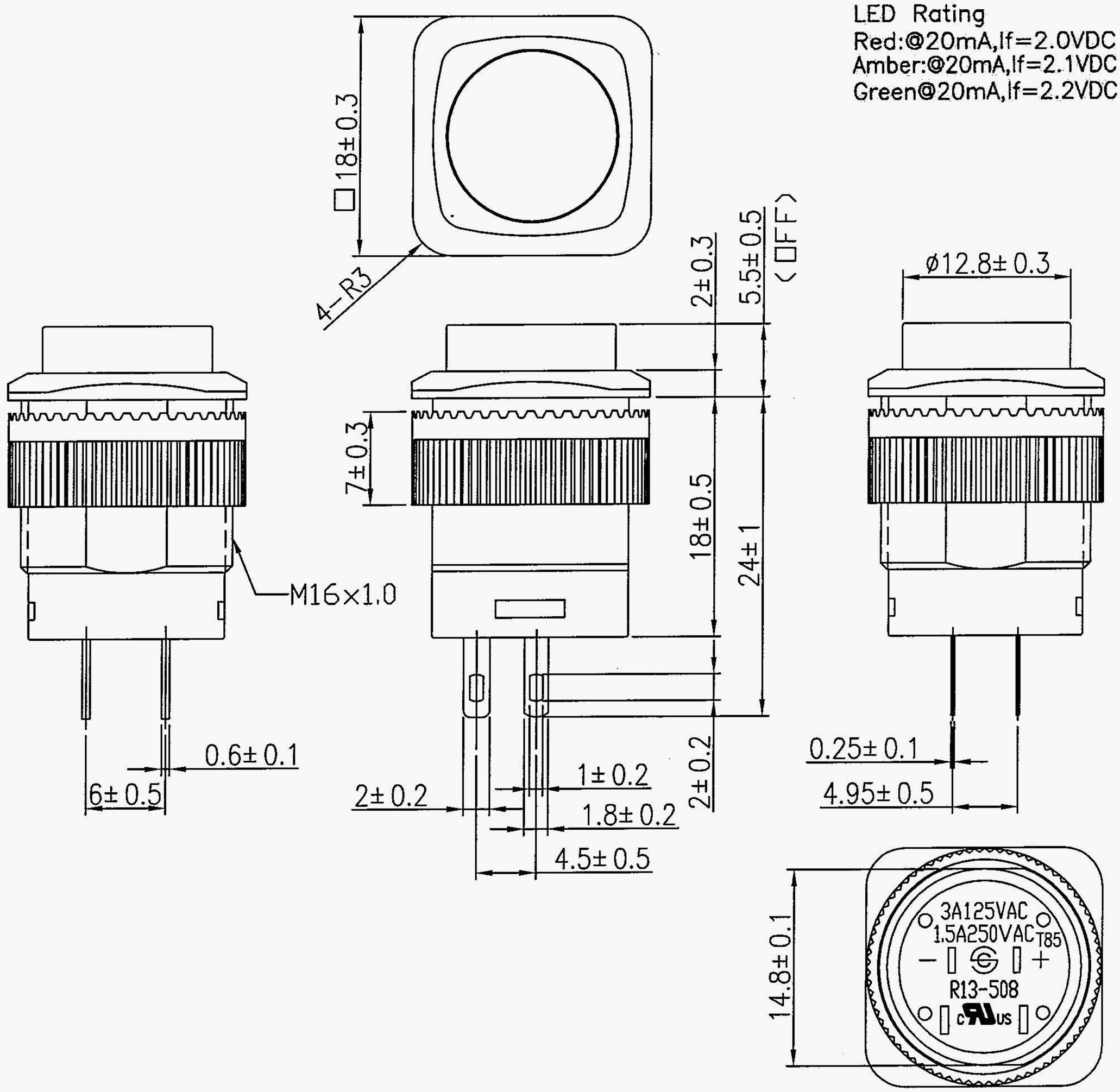

C8\R13-508\R13-508AL-05

			△
			△
Date	Name	Descriptions	NO

Drawing	Check	Approval	SCI No.		Model Name	PUSH SWITCH
曹 盈 芳			Customer No.		Model No.	SPR13-508AL-05
06/18/'04		6/18/04	Unit	mm	SWEETA PRODUCTS CORPORATION	