		Mounting Hole	Circuit Diagram
Rating	6A 125VAC, 3A 250VAC	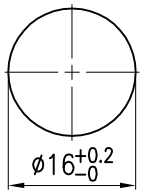	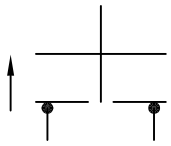
Contact Resistance	50m ohm Max.		
Insulation Resistance	DC 500V 100M ohm Min.		
Dielectric Strength	AC 1000V 1minute		
Switch Function	2P SPST OFF-(ON)		

Material:
Frame: Black, Nylon 66+30%GF
Actuator: Red, ABS
Terminals: Copper Alloy

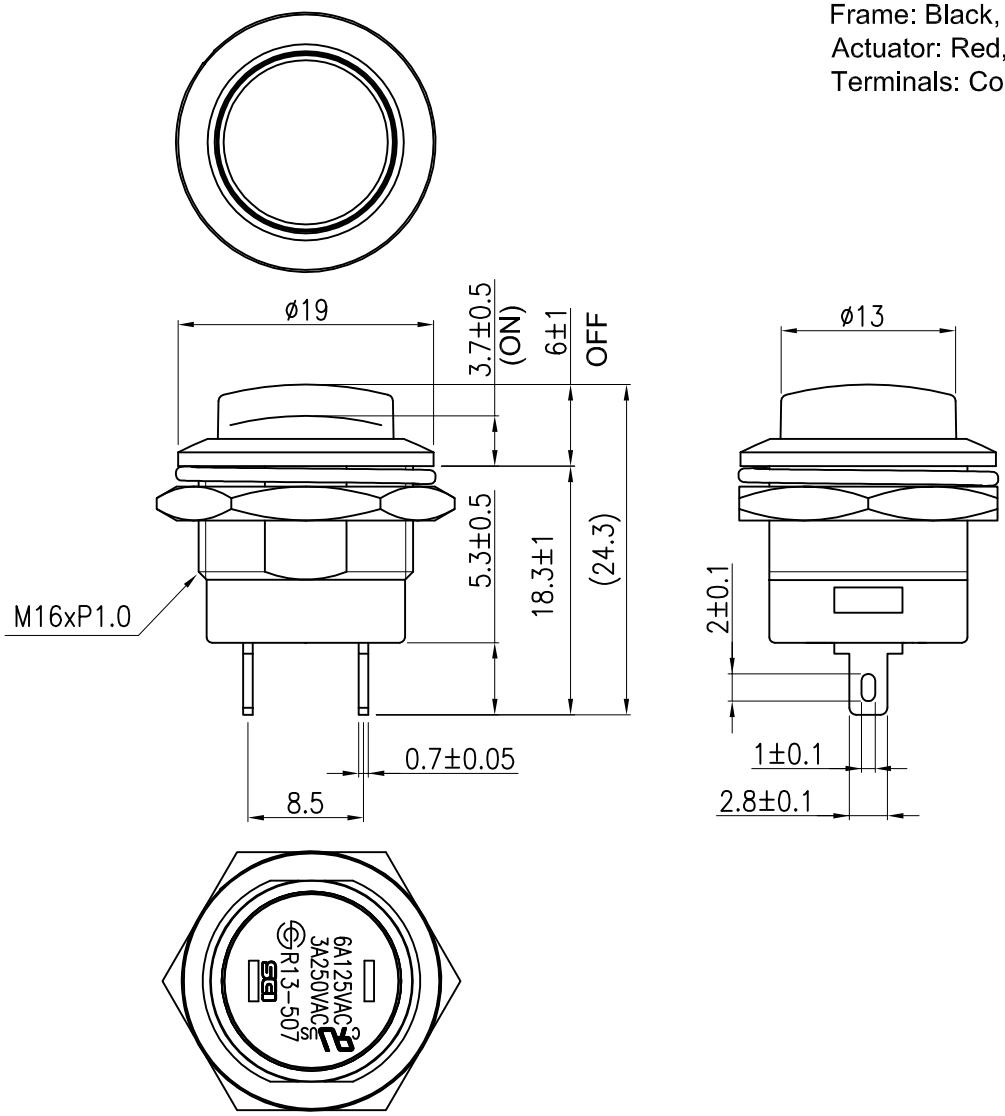

1、Tolerances Unless Otherwise Specified ±0.3

								△
								△
Date	Name	Description						No.
Drawn	Checked	Approved	SCI BOM No.	1830185		Model Name	PUSH SWITCH	
邱 權	Ruby	李元生	Customer No.	SPR13-507A-05		Model No.	SPR13-507A-KRES	Rev.
02/17/'11	03/17/'11	03/23/'11	Unit	mm	SWEETA PRODUCTS CORPORATION			0