Rating	10A 250V AC	Mounting Hole
Insulation Resistance	DC 500V 100M ohm Min	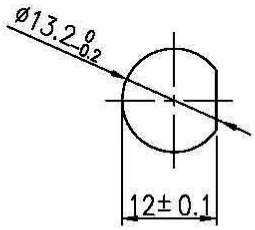
Dielectric Strength	AC 1500V 1 minute	
Fuse Rating	ø5.2x20L mm	

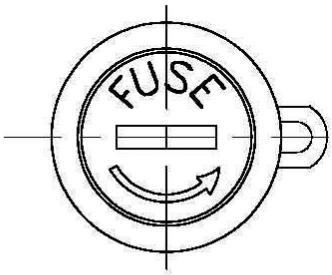

Housing: Phenol Formaldehyde, Black

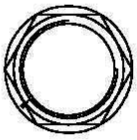

1 NUT IN BULK

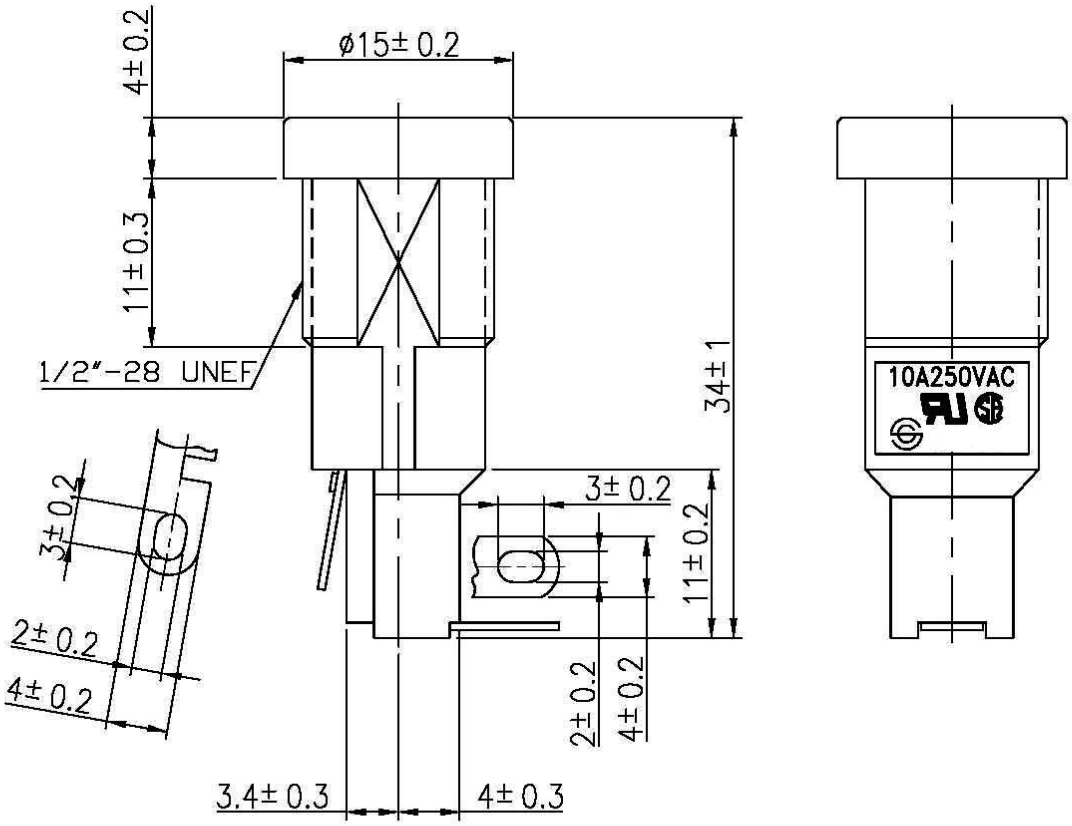

							△
							△
Date	Name	Description					NO
Drawn	Checked	Approved	BOM NO.	1310023	Model Name	Fuse Holder	
曹 盈 芳		王 佰 山	Customer No.	R3-11	Model No.	SFR3-11-V-P	REV.
04/30/'10		04/30/'10	Unit	mm	喜威達企業股份有限公司		0